Position switch

ES 61 WZ 1Ö/1S

.steute
Steuerungstechnik

Dimensional drawing

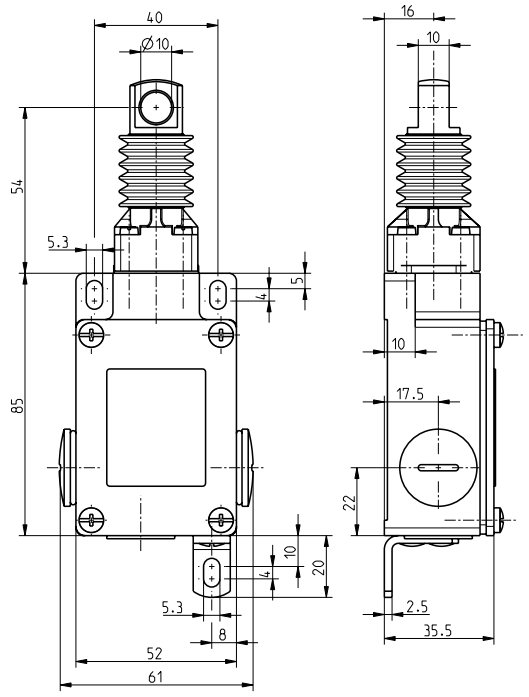

Switching path

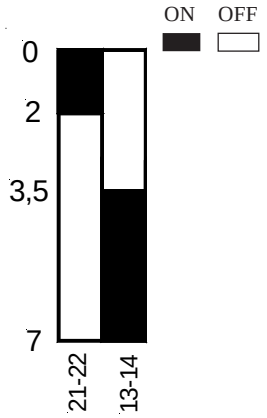

Circuit diagram

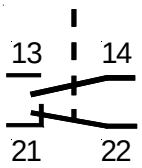

Technical Data:

Regulations:	IEC/EN 60947-5-1
Enclosure:	Aluminium die casting, paint finish
Cover:	steel, paint finish
Protection class:	IP 67 to EN 60529
Contact material:	fine silver
Switching element:	1 NC + 1 NO
Switching system:	Slow action contact
Ambient temperature:	-40° C to +80° C
Mounting connection:	M3,5 screwed connection
Actuation:	by pull wire
cable section:	max. 2,5mm² (incl. conductor ferrules)
Cable entry:	3 x M20x1,5
U_{imp}:	6 kV
U_i:	400 V
I_{the}:	10 A
Utilisation category:	AC-15
I_e/U_e:	16 A/400 VAC
Max. fuse rating:	16 A gL/gG D-fuse
Mechanical life:	>1 million operations

Specification:

- IP67
- temperature resistant -40 °C to +80° C

Part No.: 61.0.42.9.06 (1183437)

Author: *2008-02-28 Prelle* ***Checked***:	***Modification***:	***Checked***:	***Page***: *1 / 1*

steute Schaltgeräte GmbH & Co. KG
Postfach 3343 32567 Löhne
Brückenstraße 91 32584 Löhne
Telefon 05731 / 745-0
Telefax 05731 / 745200
Amtsgericht Bad Oeynhausen HRA 2125