Emergency pull-wire switch
// ZS 71 1Ö/1S WVD-NA / 200 N Order no.: 71142505

Features/Options

- Metal enclosure
- 2 contacts
- Small design
- Wire length up to 20 m
- Spring force variant (actuating force): 200 N for 5-20 m
- Release by push button
- Wire pull and breakage function
- Watertight collar W to protect against the entry of foreign bodies
- Version with emergency-stop push button for direct and fast actuation at the switch

Dimensions

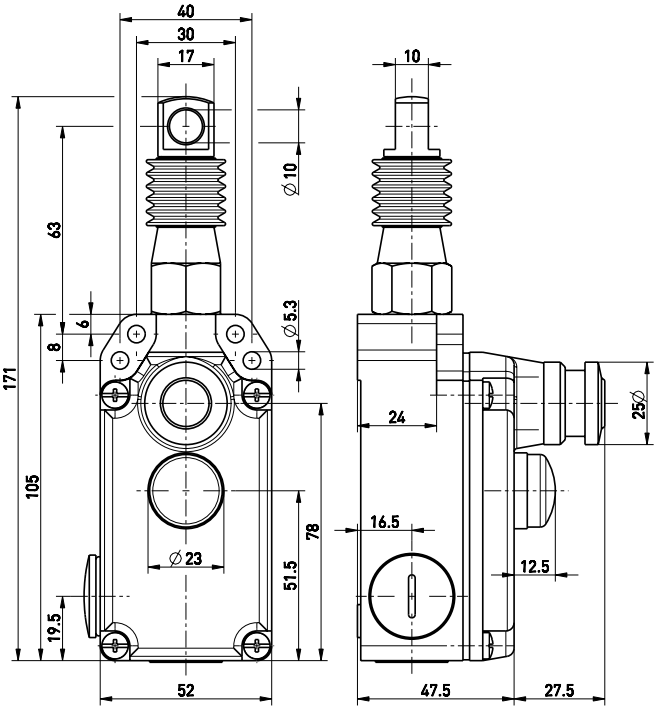

Switching diagram

Snap action

1 NC/1 NO contact with emergency-stop push button

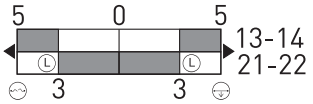

Contact diagram

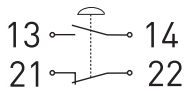

Technical data

Standards	EN ISO 13849-1; IEC/EN 60947-5-1; IEC/EN 60947-5-5; EN 418
Enclosure	aluminium die-cast, enamel finish
Cover	glass-fibre reinforced, shock-proof thermoplastic, ultramid
Degree of protection	IP 65 to IEC/EN 60529
Contact material	silver
Switching elements	change-over contact with double break
Switching system	snap action, positive break NC contact ⊖
Connection	screw terminals
Cable section	max. 2.5 mm^2 (incl. conductor ferrules)
Cable entry	2 x M20 x 1.5
B_{10d} (10% Load)	200.000
T_M	max. 20 years
U_{imp}	6 kV
U_i	400 V
I_{the}	6 A
Utilisation category	AC-15
I_e/U_e	6 A/400 VAC
Max. fuse rating	6 A gL/gG D-fuse
Ambient temperature	–25 °C ... +70 °C
Mech. life	> 100.000 operations
Max. wire length	20 m
Features	wire pull and breakage function
Approvals	
Weight	320g

Errors and omissions excepted.

steute Schaltgeräte GmbH & Co. KG | Brückenstraße 91 32584 Löhne, Germany | Telefon +49 (0) 5731 745-0 Telefax +49 (0) 5731 745-200 | info@steute.com www.steute.com